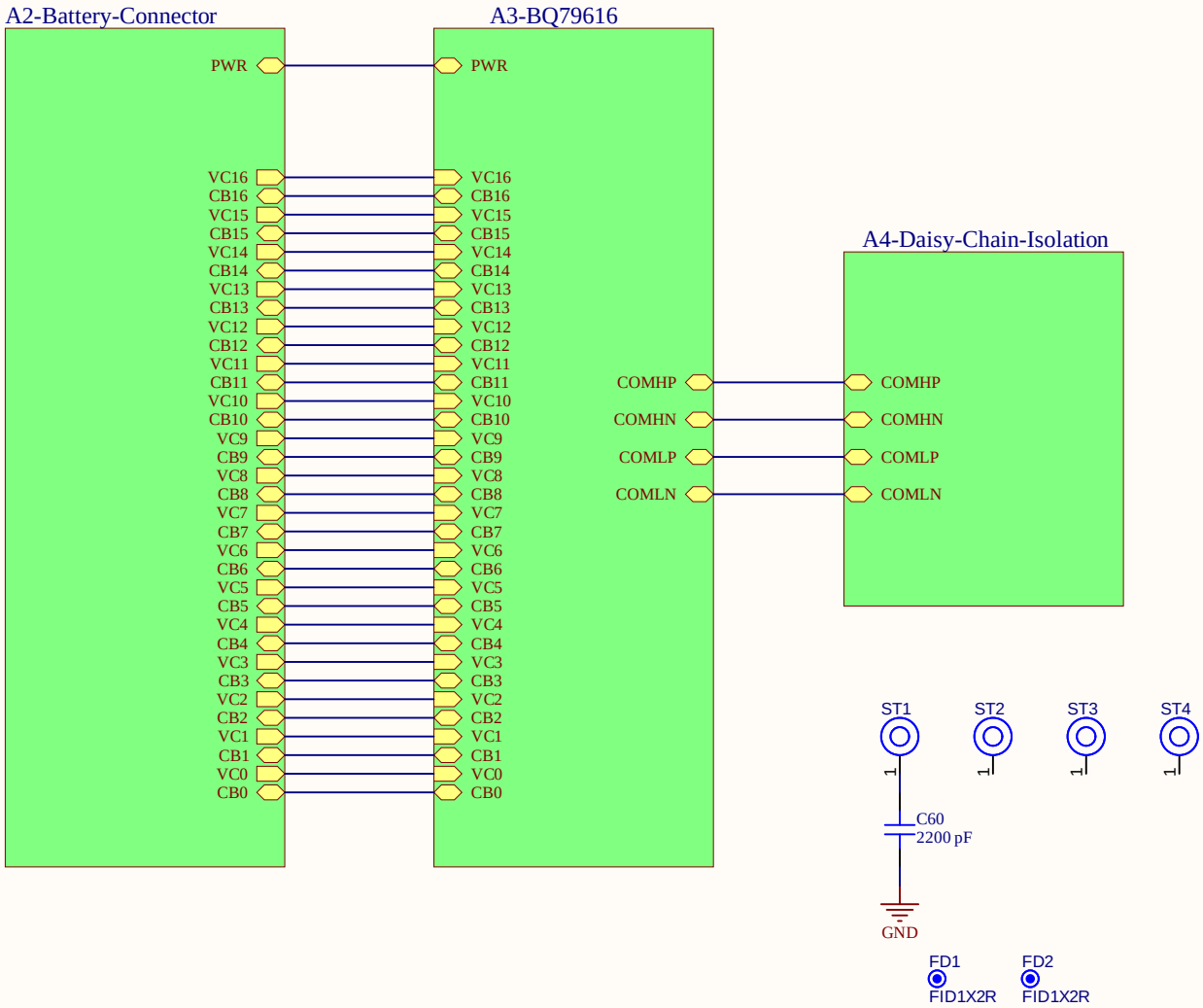

Title		
Size A	Number	Revision
Date: 10/10/2025		Sheet of
File: Main.SchDoc		Drawn By:

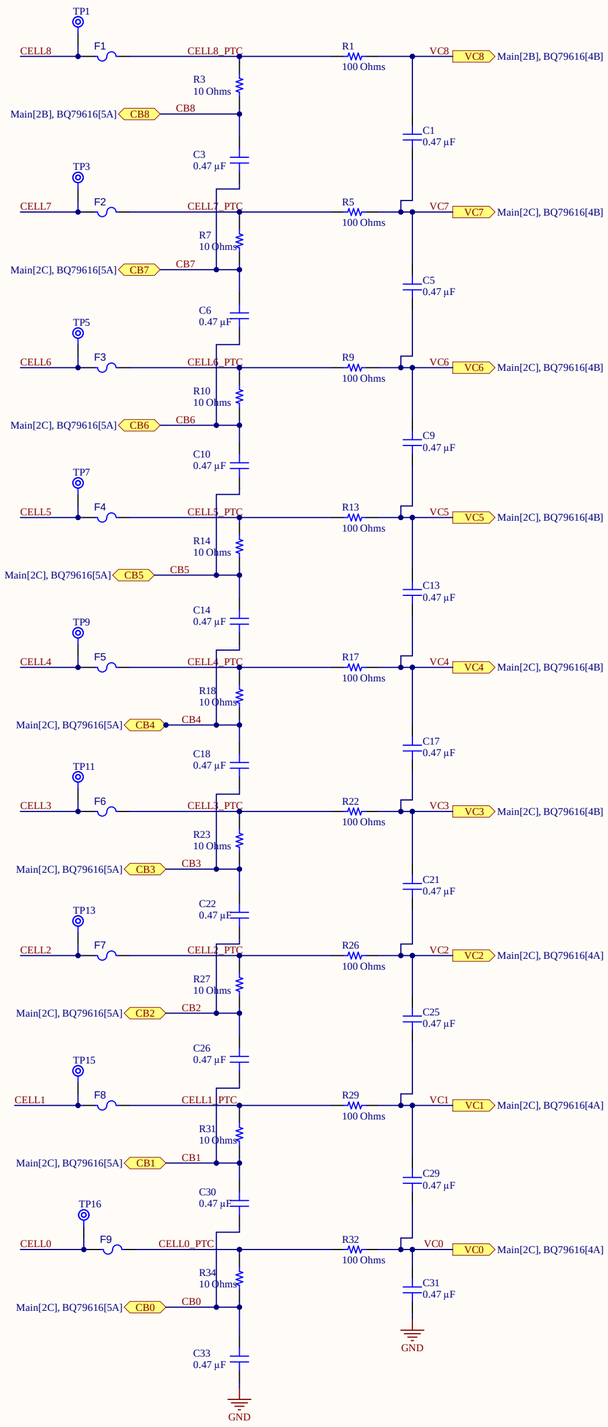

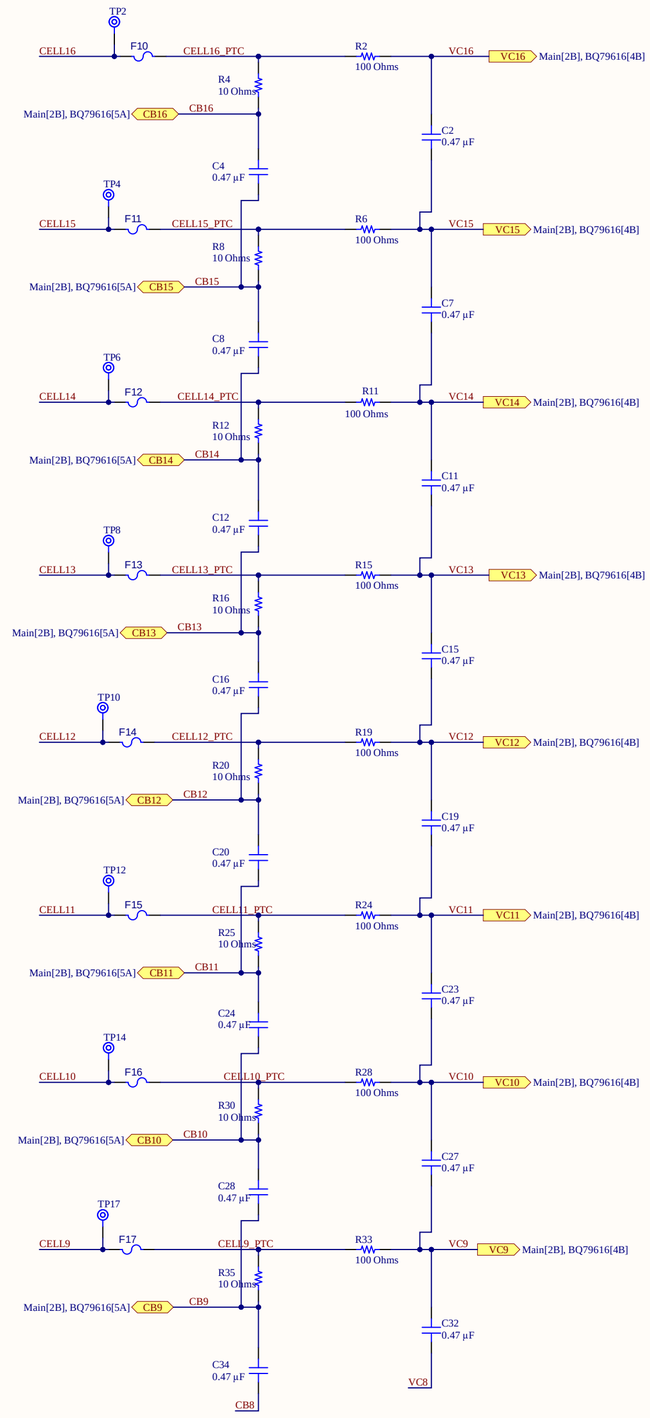

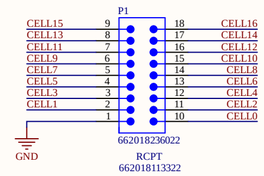

Title		
Size A2	Number	Revision
Date: 10/10/2025	Sheet of	
File: Cell-Simulator.SchDoc	Drawn By:	

All decoupling caps are as close to chip as possible

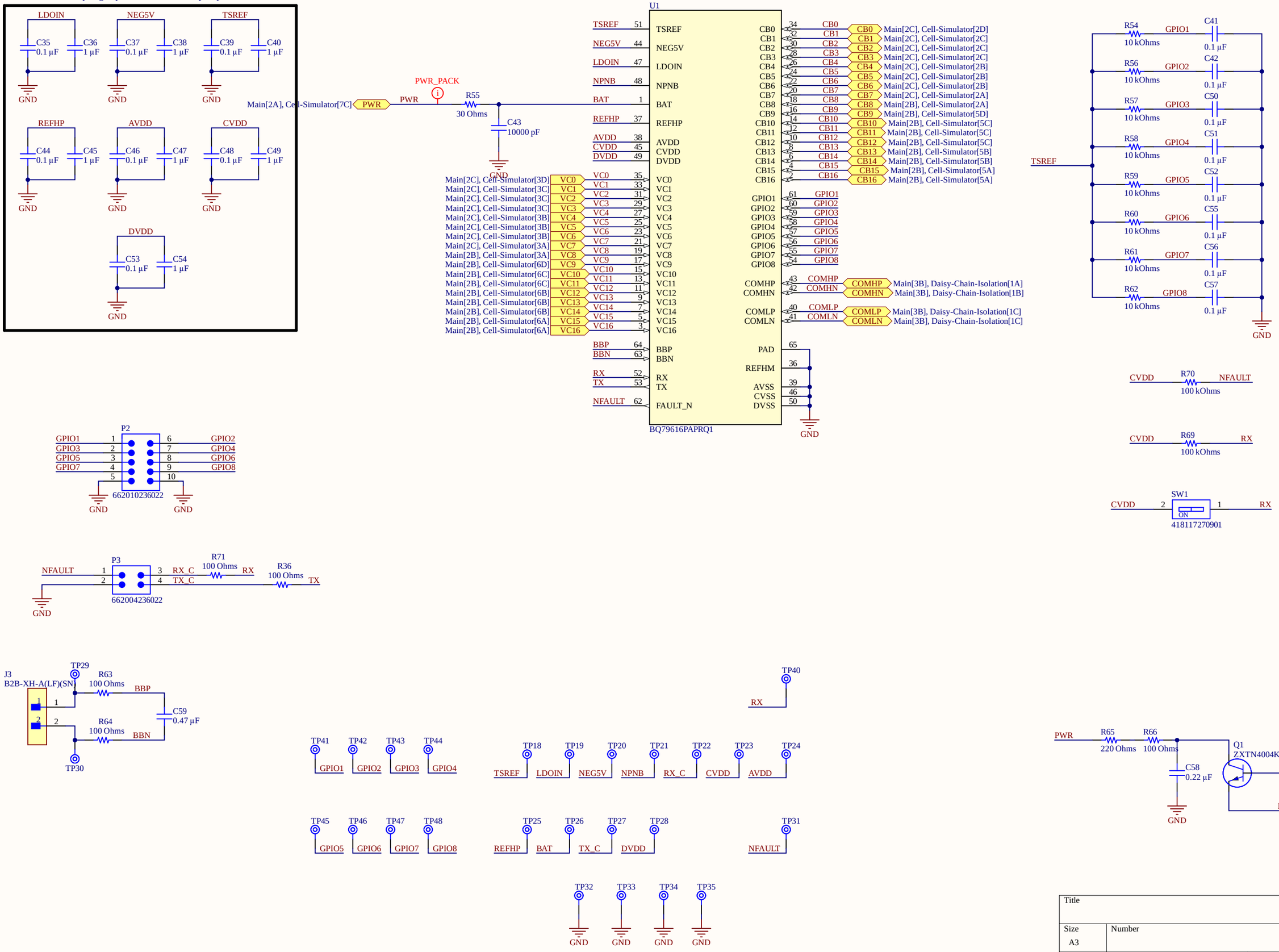

Title		
Size A3	Number	Revision
Date: 10/10/2025		Sheet of
File: BQ79616.SchDoc		Drawn By:

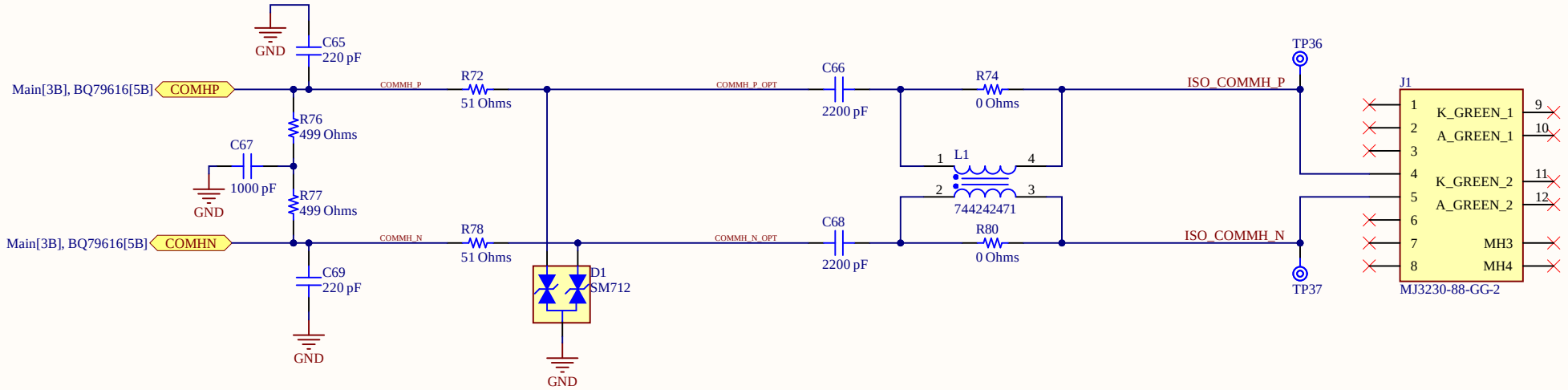

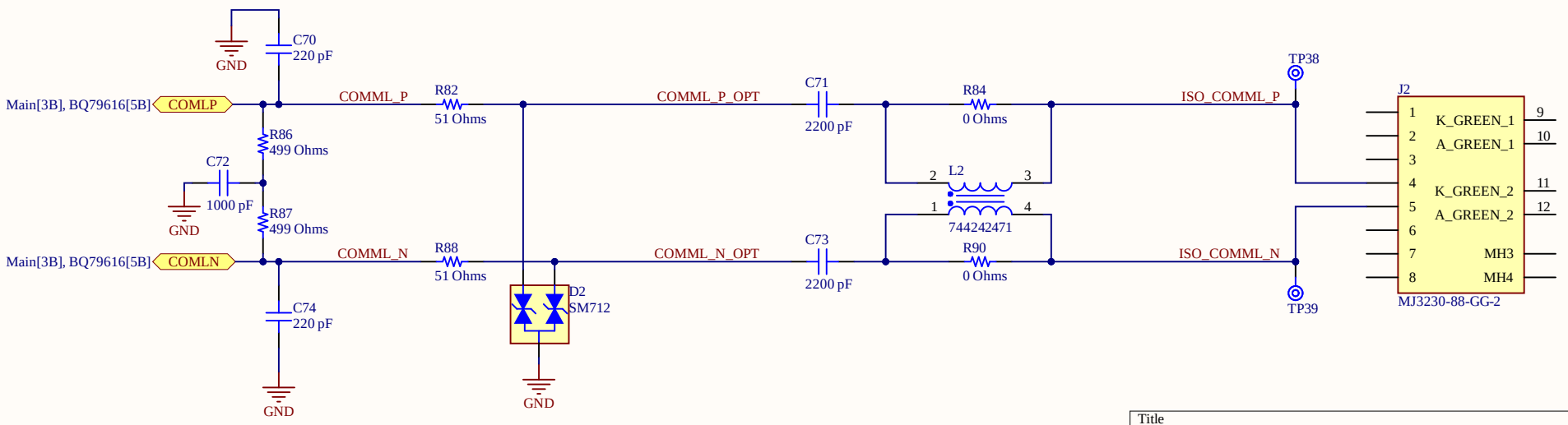

Title		
Size A4	Number	Revision
Date: 10/10/2025		Sheet of
File: Daisy-Chain-Isolation.SchDoc		Drawn By: